**Hillmar**
Hillmar Industries Ltd.
7371 Vantage Way
Delta, BC V4G 1C9
P:604 946-7115 F:604 946-0329
info@hillmar.com www.hillmar.com

# COUPLING PKM
# PKM-ND-230-LSH-MSH
# SPECIFICATION SHEET
# SLS & MKTG
# ENGLISH

| Sheet Number: | |
|---|---|
| Job Number: | |
| Form Number: | 429-610-34428PT |

| Company / Project Reference: | Date.: | Page.: | Document Package No.: | Rev.: |
|---|---|---|---|---|
| | | 1 OF 1 | | |

Inventor Drawing

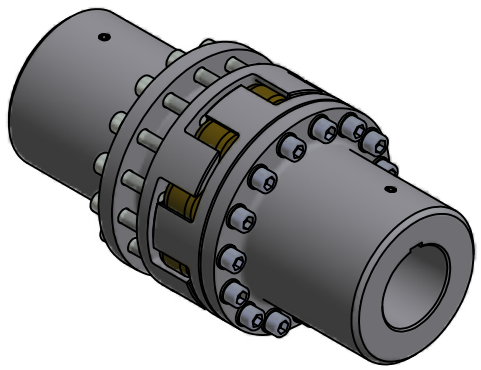

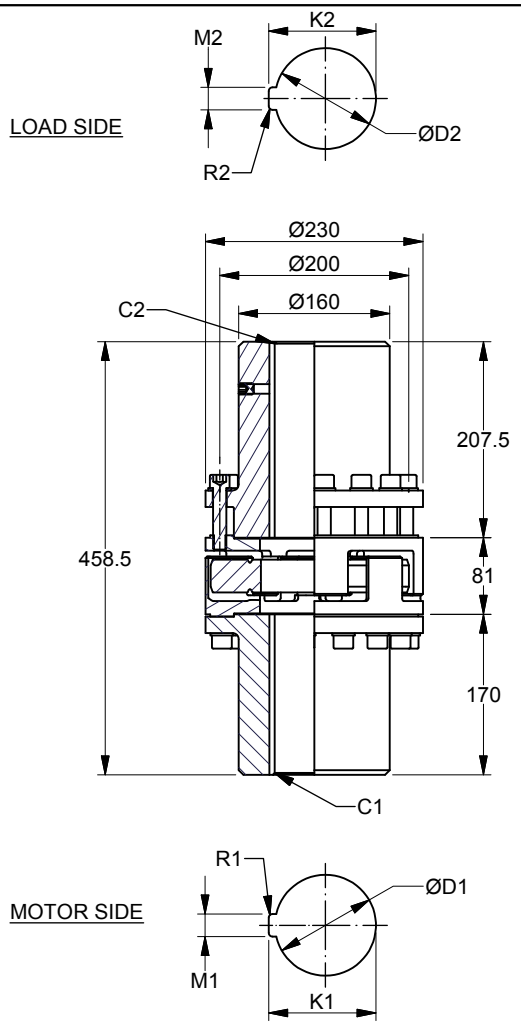


| FEATURE | CODE |
|---|---|
| Polyerethane coupling | PKM |
| No disc | ND |
| Coupling size (Hub OD) | 230 |
| Load side | LSH |
| Motor side | MSH |
| Maximum coupling torque (Nm) | 7740 |

| Example for ordering | PKM-ND-230-LSH-MSH |
|---|---|

## TECHNICAL DATA

| | |
|---|---|
| Disc model | SDBD-0500-30-230 |
| Disc diameter (mm) | 500 |
| Hub bore size MIN. (mm) | 50 |
| D1 MAX. (mm) | 110 |
| D2 MAX. (mm) | 110 |
| Moment of inertia (kgm$^2$) | 0.3481 |
| Mounting bolts | 15 x M14 |
| Bolt tightening torque (Nm) | 132 |
| MAX. coupling torque TkMAX (Nm) | 7740 |
| NOM. coupling torque TkN (Nm) | 3870 |
| MAX. coupling speed (RPM) | 2800 |
| Weight (kg) | 61,71 |

## CUSTOMER SPECIFICATIONS

| Motor side | Load side |
|---|---|
| D1:_____mm | D2:_____mm |
| M1:_____mm | M2:_____mm |
| K1:_____mm | K2:_____mm |
| R1:_____mm | R2:_____mm |
| C1:_____mm | C2:_____mm |

## NOTES

Coupling balancing grade ISO 1940-G6.3 is guaranteed for all coupling parts.

All figures are nominal figures only

All dimensions are in millimeters

Document Template #710-101-62058

** ALL TECHNICAL DATA IS SUBJECT TO CHANGE WITHOUT NOTICE **
Hillmar works have a fully registered ISO 9001-2008 quality assurance programme (QCB #01-1525)



C:\TEMP\a3f49bb3-e10c-4cd0-aed8-26c1c4c1b337\80000528073\HILLMAR\HILLMAR PRODUCTION\04 THRUSTER DB\0700-4\07004005 PKM-GKM-RKSM-RKX\SPC-SHT-PKM-GKM-RKSM-RKX\01 PKM\34428 PKM-ND-230-LSH-MSH.idw